FLAMINGO™ Pet Products

Packaging & Design
Flamingo
Pet Products nv
Lammerdries - Winkelstraat 25,
2250 Olen - Belgium
www.flamingo.be

FLA_020582_MA_561961_KRABPAAL AGUSTIN GRIJS 78x48x135CM

Artwork size:	**297 x 210 mm**	Colours:	Forme	Controlled: GOEDGEKEURD Door Silvy om 13:44,2-4-25
Packaging size:			PMS 0000 C	
Date (final):	**20/03/2025**		PMS 0000 C	
Material:	**Paper, 90 g**	Black	PMS 0000 C	Finishing: **mat**
			PMS 0000 C	

FLAMINGO™

Scratching tree “Agustin”

art.: 561961

78 x 48 x 135cm

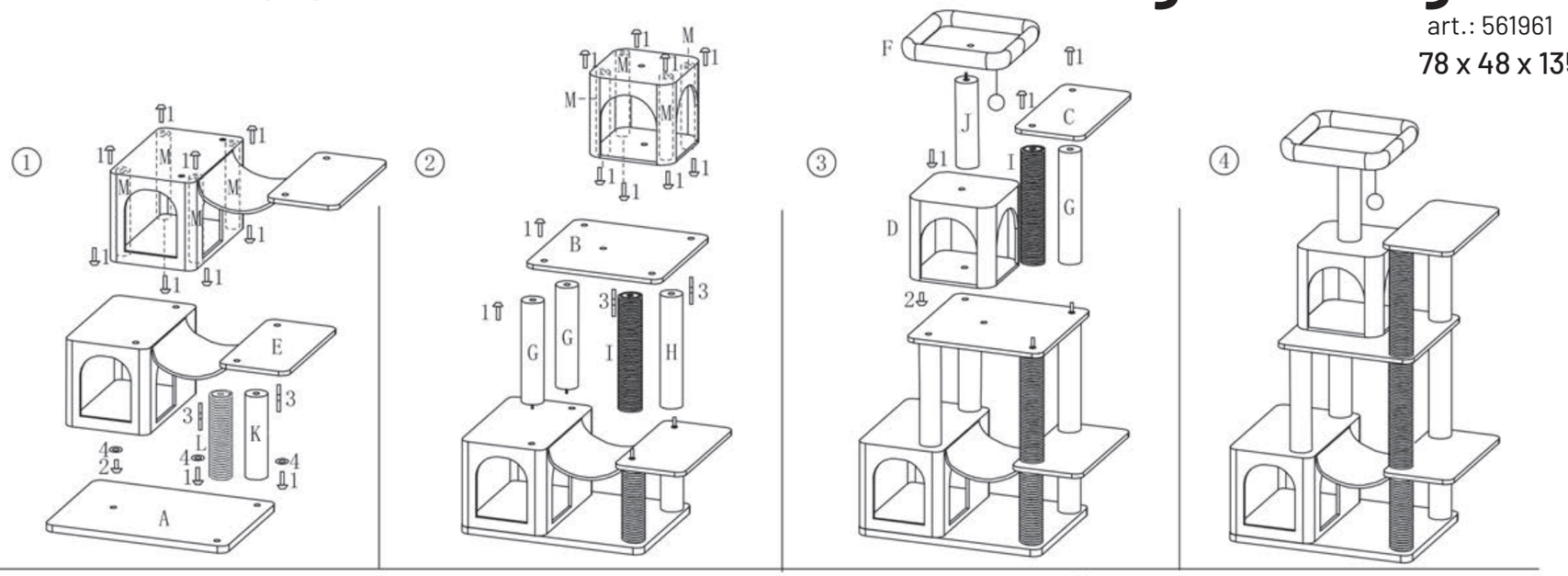

1X	64.5x47.5x2.5cm	A	
1X	48*48*1.5cm	B	
1X	25*48*1.5cm	C	
1X	30*30*28cm	D	
1X	91*48*28cm	E	
1X	30*30*6cm	F	
2X	D6.5x40cm		
2X	D6.5x40cm	H	
2X	D7*40cm	I	
1X	D6.5x30cm	J	
1X	D6.5x26.2cm	K	
1X	D7*26.2cm	L	
8X	D3*25cm	M	

23X	D8*40mm	(1)
2X	D8*30mm	(2)
4X	D8*70mm	(3)
3X	D30mm	(4)
	D5MM	

FLA_020582_MA