FLAMINGO™ Pet Products

Packaging & Design
**Flamingo**
**Pet Products nv**
Lammerdries - Winkelstraat 25,
2250 Olen - Belgium
**www.flamingo.be**

**FLA_020579_MA_561960_KRABPAAL MARIANO GRIJS 82x43,5x135CM**

| | | | | |
|---|---|---|---|---|
| Artwork size: | **297 x 210 mm** | Colours: | ◯ Forme | Controlled: **GOEDGEKEURD** *Door Silvy om 13:33,2-4-25* |
| Packaging size: | | | PMS 0000 C | |
| Date (final): | **20/03/2025** | | PMS 0000 C | |
| | | | PMS 0000 C | |
| Material: | **Paper, 90 g** | ● Black | PMS 0000 C | Finishing: **mat** |

FLAMINGO™

# Scratching tree “Mariano”

art.: 561960

82 x 43.5 x 135cm

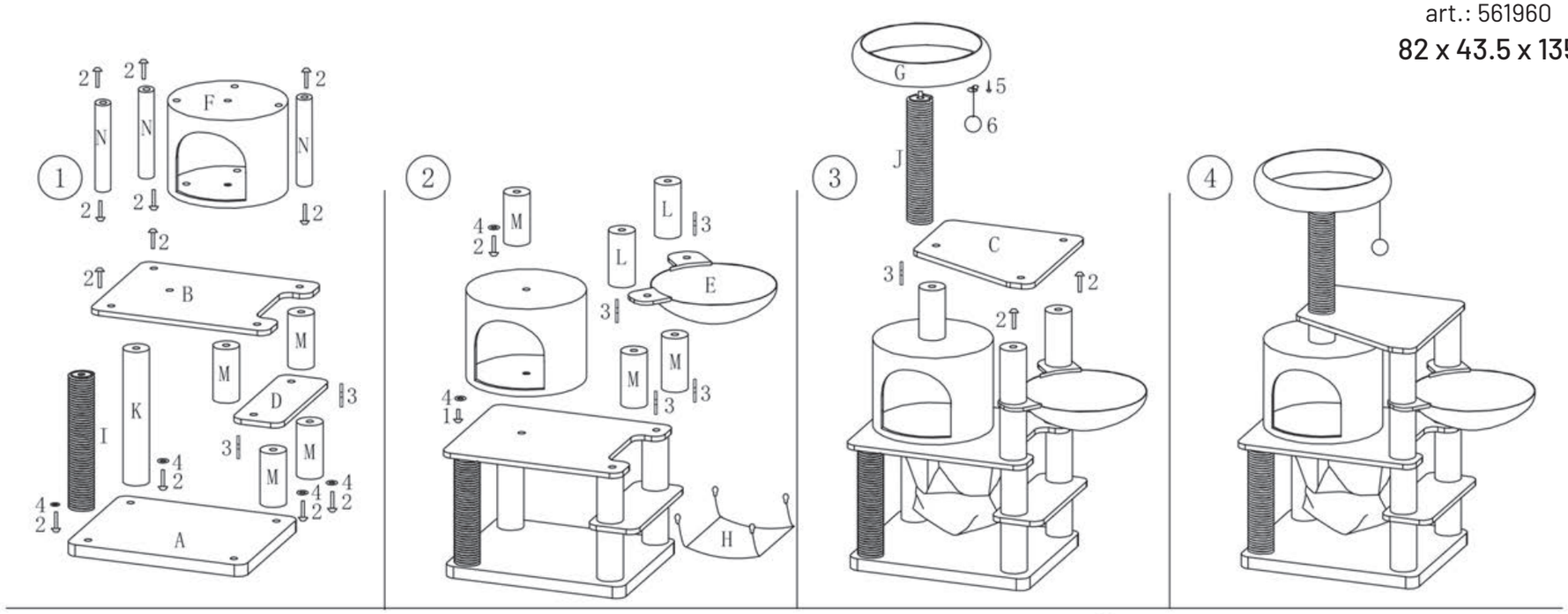


| | | | | | | | | | | | |
|---|---|---|---|---|---|---|---|---|---|---|---|
| 1X | 54.5x44.5x2.5cm | A | 1X | D35cm | E | 1X | D7*40cm | I | 1X | D8*30mm | (1) |
| 1X | 55*45*1.5cm | B | 1X | D34*28cm | F | 1X | D7*35cm | J | 15X | D8*40mm | (2) |
| 1X | 43*45*1.5cm | C | 1X | D38*8cm | G | 1X | D6.5x40cm | K | 7X | D8*80mm | (3) |
| 1X | 15*45*1.5cm | D | 1X | 40*40cm | H | 2X | D6.5x27.1cm | L | 6X | D30mm | (4) |
| | | | | | | 7X | D6.5x19.4cm | M | 1X | D4*12mm | (5) |
| | | | | | | 3X | D3*25cm | N | 1X | D5MM | (6) |

FLA_020579_MA