FLAMINGO™ Pet Products

Packaging & Design
**Flamingo**
**Pet Products nv**
Lammerdries - Winkelstraat 25,
2250 Olen - Belgium
**www.flamingo.be**

**FLA_020570_MA_561957_KRABPAAL CAMILO GRIJS 86x58x134CM**

| | | | | |
|---|---|---|---|---|
| Artwork size: | **297 x 210 mm** | Colours: | Forme | Controlled: |
| Packaging size: | | | PMS 0000 C<br>PMS 0000 C<br>PMS 0000 C<br>PMS 0000 C | GOEDGEKEURD<br>Door Silvy om 13:17,2-4-25 |
| Date (final): | **20/03/2025** | Black | | |
| Material: | **Paper, 90 g** | | | Finishing: **mat** |

FLAMINGO™

# Scratching tree “Camilo”

art.: 561957

86 x 58 x 134cm

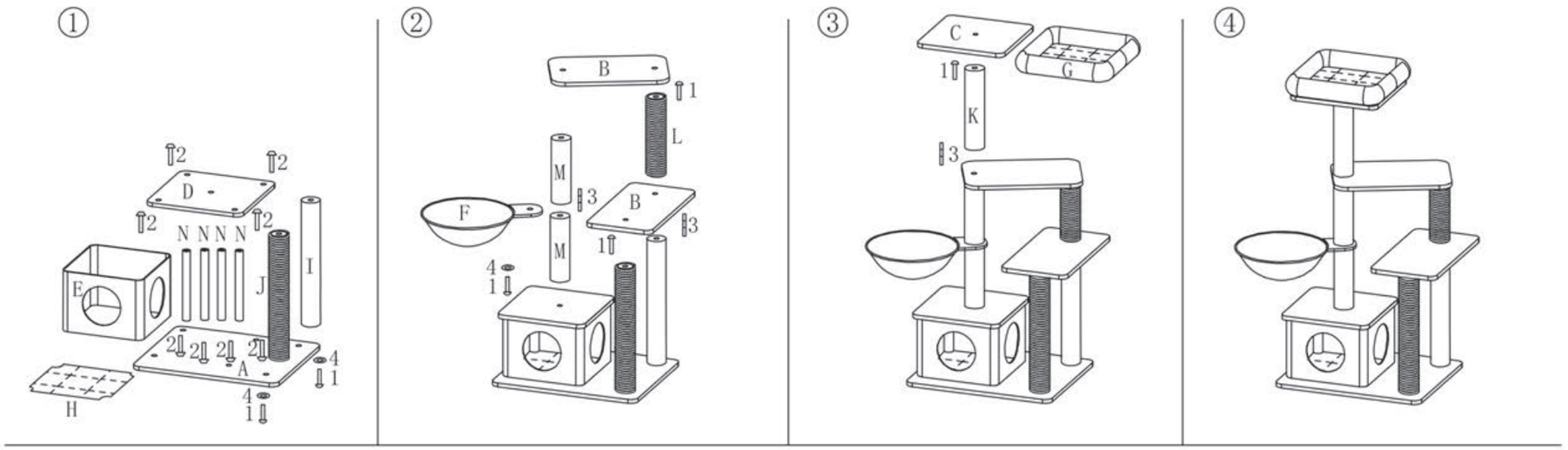


| | | | | | | | | | | | |
|---|---|---|---|---|---|---|---|---|---|---|---|
| 1X | | 59*49*1.5cm | A | 1X | | 34*34*28cm | E | 1X | D6.5x50cm | I | 6X D10*45mm (1) |
| 2X | | 45*29*1.5cm | B | 1X | | D35cm | F | 1X | D7*50cm | J | 8X D8*40mm (2) |
| 1X | | 39*39*1.5cm | C | 1X | | 43*43*8cm | G | 1X | D7.8x35cm | K | 3X D10*70mm (3) |
| 1X | | 39*39*1.5cm | D | 1X | | 35*35cm | H | 1X | D7*35cm | L | 3X D40mm (4) |
| | | | | | | | | 2X | D7.8x28cm | M | D5MM D6MM |
| | | | | | | | | 4X | D3*28cm | N | |



FLA_020570_MA